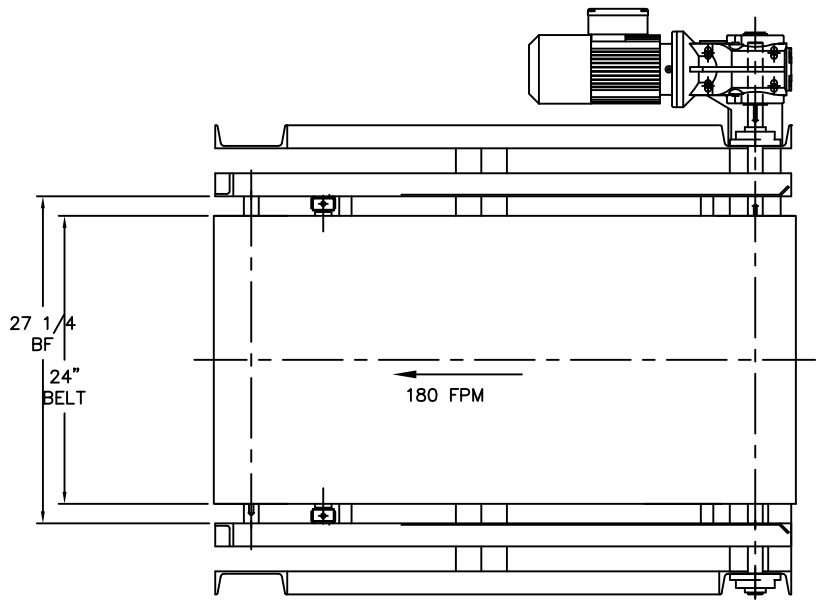

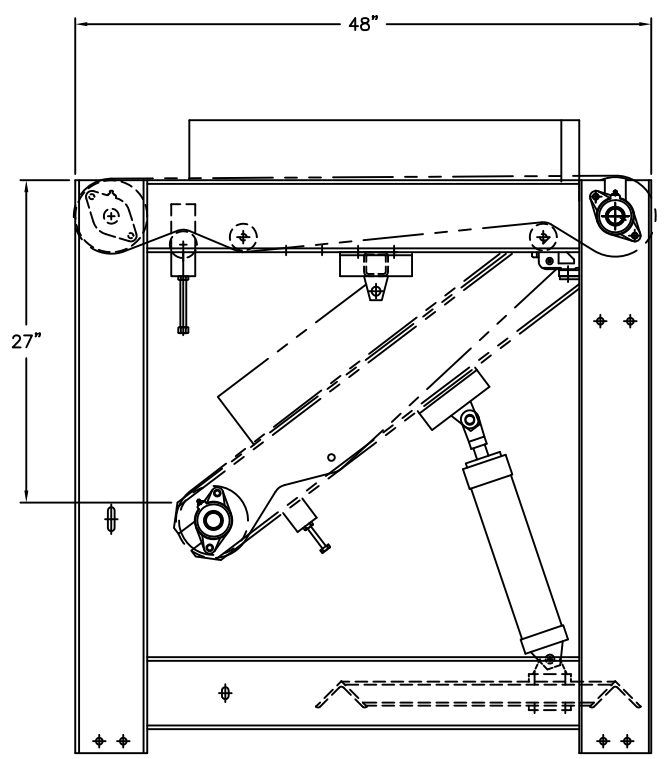

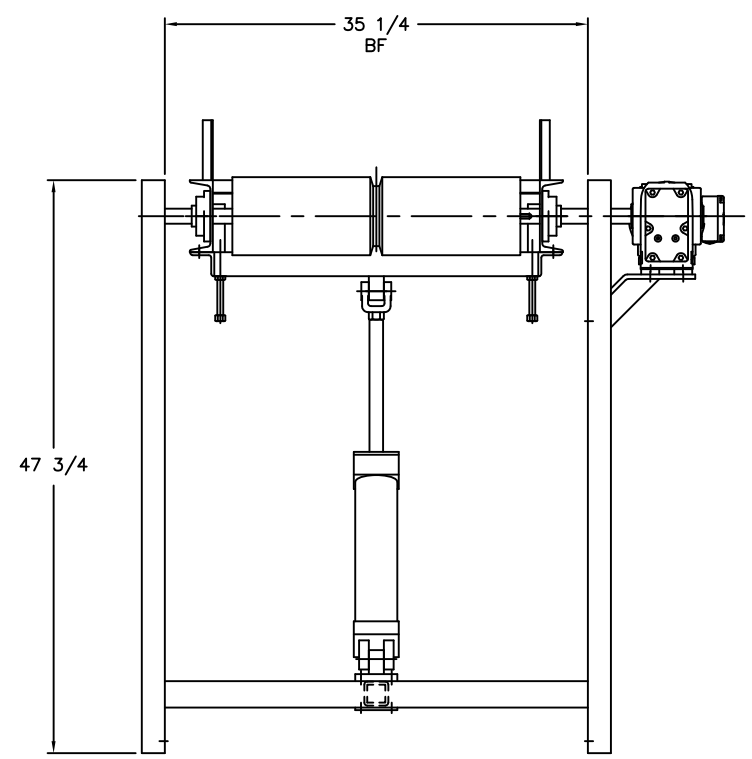

KEY	QTY	DESCRIPTION	PART NUMBER
		BILL OF MATERIAL	

CAD REF:

PACKAGING SYSTEMS
International Incorporated

4990 Acoma St. Denver, CO 80216
Phone 303-296-4445, Fax 303-296-1016
Parts 1-800-525-8110
www.pkgsys.com

TOLERANCES UNLESS OTHERWISE SPECIFIED
DECIMAL .X ± .1
.XX ± .03
.XXX ± .010
FRACTIONAL ± 1/16
ANGULAR ±1°

DO NOT SCALE DRAWING

REV. DESCRIPTION

CUSTOMER
ADDRESS: P.S.I. ORDER #
TITLE ASSY, HINGED GATE CONVEYOR
27 1/4 BF
NEXT ASS'Y
SHEET NO. 1 OF 1
DRAWN BY
DATE 06/25/14
CHECKED BY
SCALE 1/8
DRAWING NUMBER
01-18-000003-05