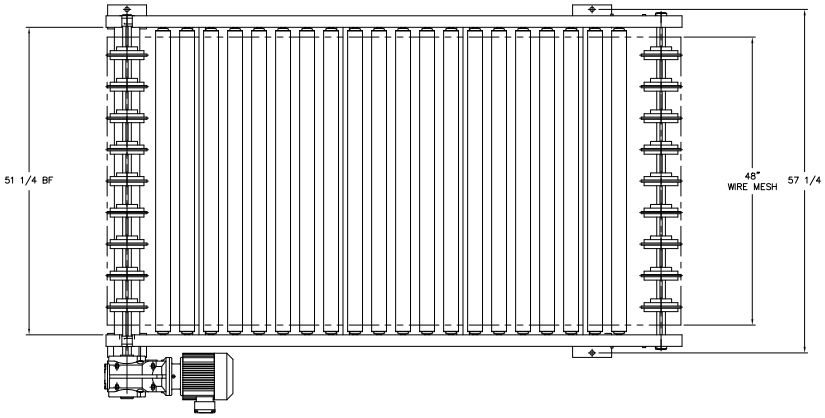


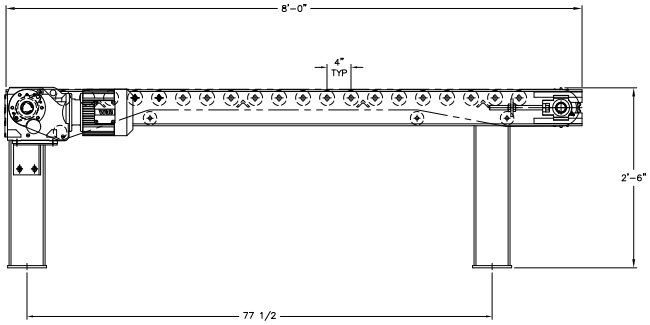


| KEY | QTY | DESCRIPTION | PART NUMBER |
|---|---|---|---|
| | | BILL OF MATERIAL | |

CAD REF:

PACKAGING SYSTEMS
International Incorporated

4990 Acoma St. Denver, CO 80216
Phone 303-295-2555, Fax 303-295-1016
Parts 1-800-525-8110
www.pisys.com

DESCRIPTION

TOLERANCES UNLESS OTHERWISE SPECIFIED
DECIMAL .X ± .1
.XX ± .03
.XXX ± .015
FRACTIONAL ± 1/16
ANGULAR ±1°

DO NOT SCALE DRAWING

REV

CUSTOMER

ADDRESS:

P.S.I. ORDER #

TITLE ASSY, FULL PALLET WIRE MESH CONVEYOR
51 1/4 BF X 30" BH, 8'-0" LG, 60 FPM

NEXT ASSY

SHEET NO. 1 OF 1

DRAWN BY R. Donley

DATE 6/18/08

CHECKED BY

SCALE 1/8

DRAWING NUMBER 01-07-000001-06