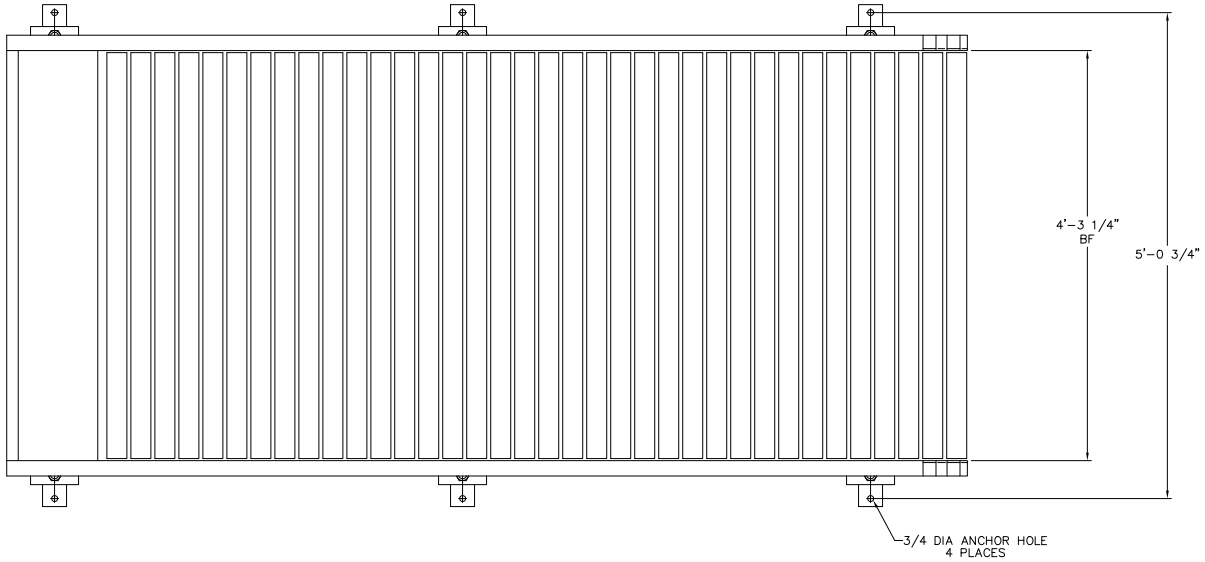

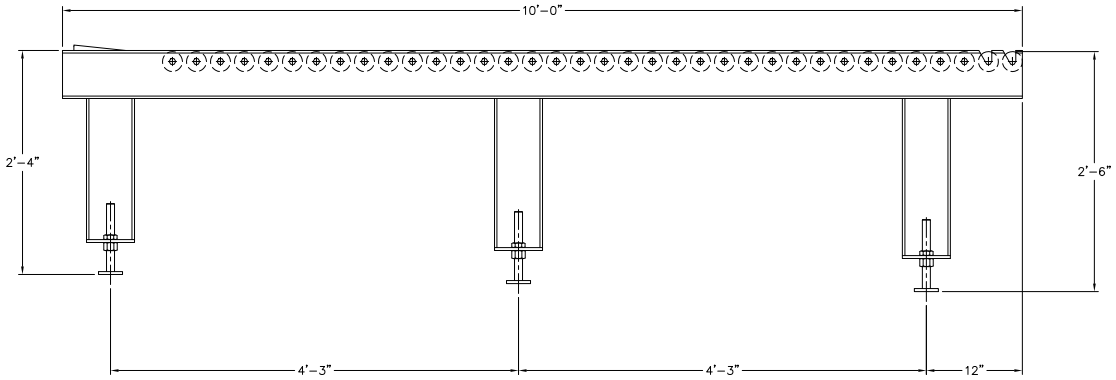

KEY	QTY	DESCRIPTION	PART NUMBER
		BILL OF MATERIAL	

CAD REF: 1D071422-20

PACKAGING SYSTEMS
International Incorporated

4990 Acoma St. Denver, CO 80216
Phone 303-296-4445, Fax 303-296-1016
Parts 1-800-525-6110
www.pkgsys.com

TOLERANCES UNLESS OTHERWISE SPECIFIED
DECIMAL .X ± .1 .XX ± .03 .XXX ± .010
FRACTIONAL ± 1/16
ANGULAR ±1°

DO NOT SCALE DRAWING

CUSTOMER
ADDRESS:
P.S.I. ORDER #
TITLE ASSY, FULL PALLET GRAVITY CONV 51 1/4 BF, 10'-0" LG, 30" HT
NEXT ASSY 1D075257-01
SHEET NO. 1 OF 1
DRAWN BY A. LOTT
DATE 11/19/97
CHECKED BY
SCALE 1/8
DRAWING NUMBER 1 D 075075-02
REV. DESCRIPTION